EBARA

Japanese Technology since 1912

# Automatic Booster Pump

Type MHS Booster - PC

## OPERATIVE FEATURES

- Quiet operation, thanks to EBARA design that makes this possible.
- Starts and stops the pump when the tap is opened or closed.
- Maintain pressure at a constant level during operation, eliminating hot/cold shower fluctuations.
- Shuts off the pump if loss of prime or dry-running occurs.
- Self-priming operation is required.
- Ensure your pump system to operate at optimum performance.

## PC CONTROLLER

PRESSCONTROL (PC) is an electronic device ensuring optimum control of automatic water pressure system.

An intelligent combination of hydraulic and electronic know-how, PC controller monitors both pressure and flow and automatically controls the pump efficiently. No pressure tank required and no adjustment of pressure setting is required. Also, any risk of pump damage as a result of dry running is eliminated, as the device will automatically cut-off should the incoming water supply is insufficient.

Most importantly, **EBARA MHS BOOSTER** type MHS-PC is absolutely quiet, durable and simple to install.

*PC controller unit*

# Automatic Booster Pump — MHS Booster - PC

= 2850 min$^{-1}$

| PUMP MODEL | P2 | | *Application | Q $m^3/h$ | 0 | 0.6 | 1.2 | 1.8 | 2.4 | 3.0 | 3.6 | 4.2 | 4.8 | 5.4 | 6.0 | 7.2 | 7.8 | 8.7 |
|---|---|---|---|---|---|---|---|---|---|---|---|---|---|---|---|---|---|---|
| | KW | HP | | l/min | 0 | 10 | 20 | 30 | 40 | 50 | 60 | 70 | 80 | 90 | 100 | 120 | 130 | 145 |
| MHS60-3M-PC | 0.5 | 0.65 | | | 30 | 29 | 26 | 22 | 17 | 12 | 7 | - | - | - | - | - | - | - |
| MHS60-5M-PC | 0.85 | 1.15 | | | 50 | 48 | 44 | 38 | 31 | 24 | 15 | - | - | - | - | - | - | - |
| MHS90-4M-PC | 0.85 | 1.15 | | H (m) | 43 | 42 | 41 | 39 | 36 | 33 | 29 | 24 | 17 | 9 | - | - | - | - |
| MHS120-4M-PC | 1.0 | 1.3 | | | 48 | 47 | 46 | 44 | 42 | 39 | 35 | 31 | 27 | 25 | 17 | 6 | - | - |
| MHS145-4M-PC | 1.3 | 1.65 | | | 50 | 49 | 48 | 47 | 45 | 43 | 41 | 38 | 35 | 32 | 28 | 18 | 14 | 5 |

Q=FLOW RATE H=TOTAL DYNAMIC HEAD IN METERS

*For guidance only

## DIMENSION

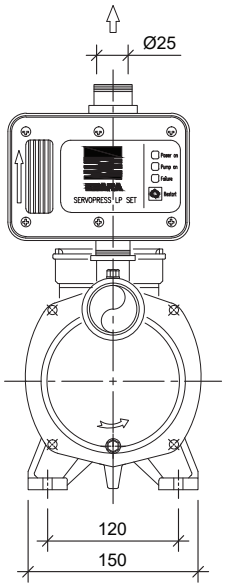


FRONT VIEW

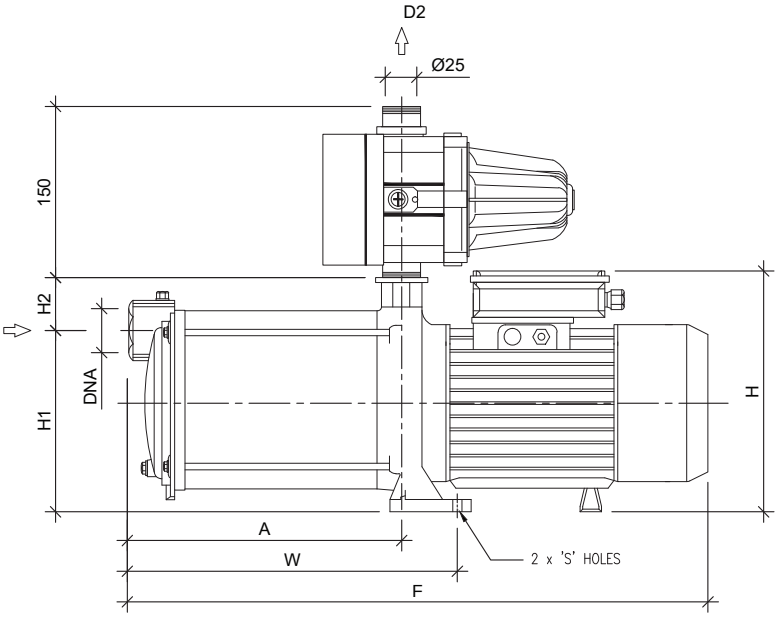


SIDE VIEW

| Pumps Type | kW | Dimensions (mm) | | | | | | | Suction | Discharge |
|---|---|---|---|---|---|---|---|---|---|---|
| | | A | F | H | H1 | H2 | W | S | | |
| Single Phase | P2 | 1~ | | | | | | | DNA | D2 |
| MHS60-3M-PC | 0.5 | 170.5 | 359 | 192 | 122 | 32.5 | 188.5 | 10 | 1" NPT | 1" NPT |
| MHS60-5M-PC | 0.85 | 219 | 432 | 204 | 126 | 36.5 | 239 | 10 | 1" NPT | 1" NPT |
| MHS90-4M-PC | 0.85 | 194.5 | 407.5 | 204 | 126 | 36.5 | 214.5 | 10 | 1" NPT | 1" NPT |
| MHS120-4M-PC | 1.0 | 194.5 | 407.5 | 204 | 126 | 36.5 | 214.5 | 10 | 1 ¼" NPT | 1" NPT |
| MHS145-4M-PC | 1.3 | 194.5 | 437.5 | 204 | 126 | 36.5 | 214.5 | 10 | 1 ¼" NPT | 1" NPT |

* Dimensional details are provided for reference only.
* All specifications are subject to change without prior notice.

Authorised dealer: